KillTest

Higher Quality, Better Service!

Q&A

http://www.killtest.com

We offer free update service for one year.

Exam : **000-990**

Title : IBM WebSphere Bus Modeler Adv V6.0, Bus Anl+Design

Version : DEMO

1.Click the Exhibit button. The exhibit shows the task list for a simulation that was run with 10 tokens. Notice the note "Simulation finished but all tasks were not completed." The dialogue below appears when the details link is selected. Only one token passed through the first task and then Task:3. Then the simulation apparently halted and then timed out. The BEST solution to this problem would be which of the following?

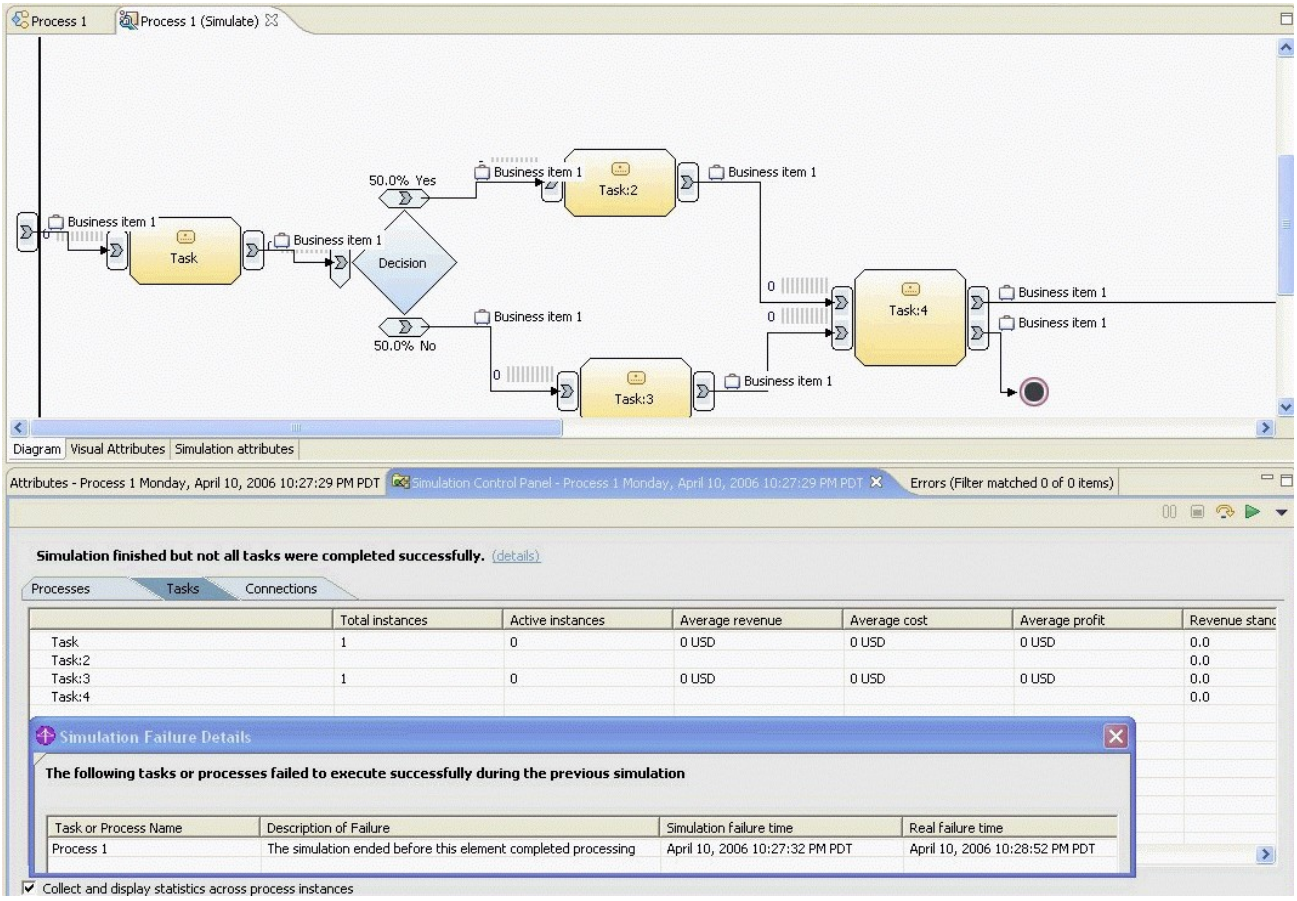

A.Resolve inconsistencies in the Data Model.

B.Add a merge to join the paths through Task:2 and Task:3.

C.Modify the input criteria of Task:4 to use OR instead of AND.

D.Apply user input that the simulation is waiting for.

Correct:C

2.Which of the following reports would give the BEST comprehensive evaluation for the cost of a process?

A.Static Analysis Resource Cost

B.Static Analysis Activity Cost and Duration

C.Dynamic Analysis Process Instance Cost

D.Dynamic Analysis Process Cost

Correct:D

3.Click the Exhibit button. A simulation has been set to run 100 tokens. When reviewing results, it appears that the simulation has counted 200 tokens for the task "Route Application." The doubling of the tokens was caused by "AND" statements (rather than an "OR" statement) for the output of the Process "Receive Application from Agent" and the input for "Process Applications." Once this has been corrected, what else must be changed for the process to run correctly?

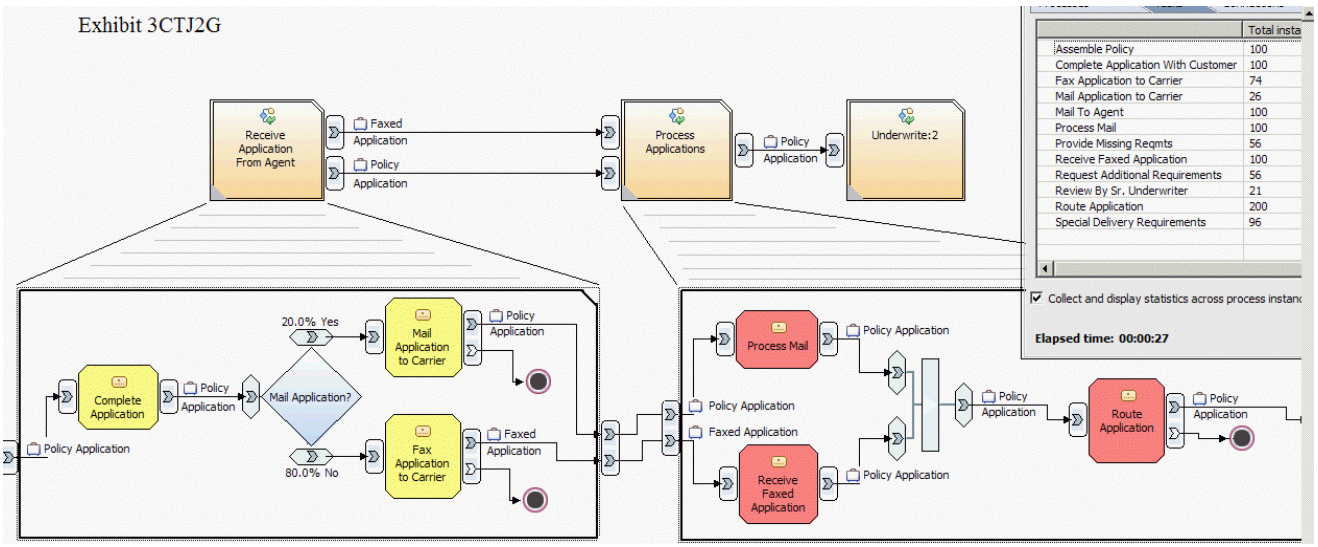

A.Set the two Stop Nodes in "Receive Application from Agent" to End Nodes.

B.Set the "Method of Selecting an output Path" to "Based on an expression" in the General Tab of the simulation snapshot attributes.

C.Set the input logic for the task "Route Application" to "OR" rather than "AND."

D.Replace the Join with a Merge object.

Correct:D

4.Click the Exhibit button. A simulation is run on the process shown in the diagram. The results of 100 tokens being passed in the simulation is also shown. Which of the following is true based upon the simulation results?

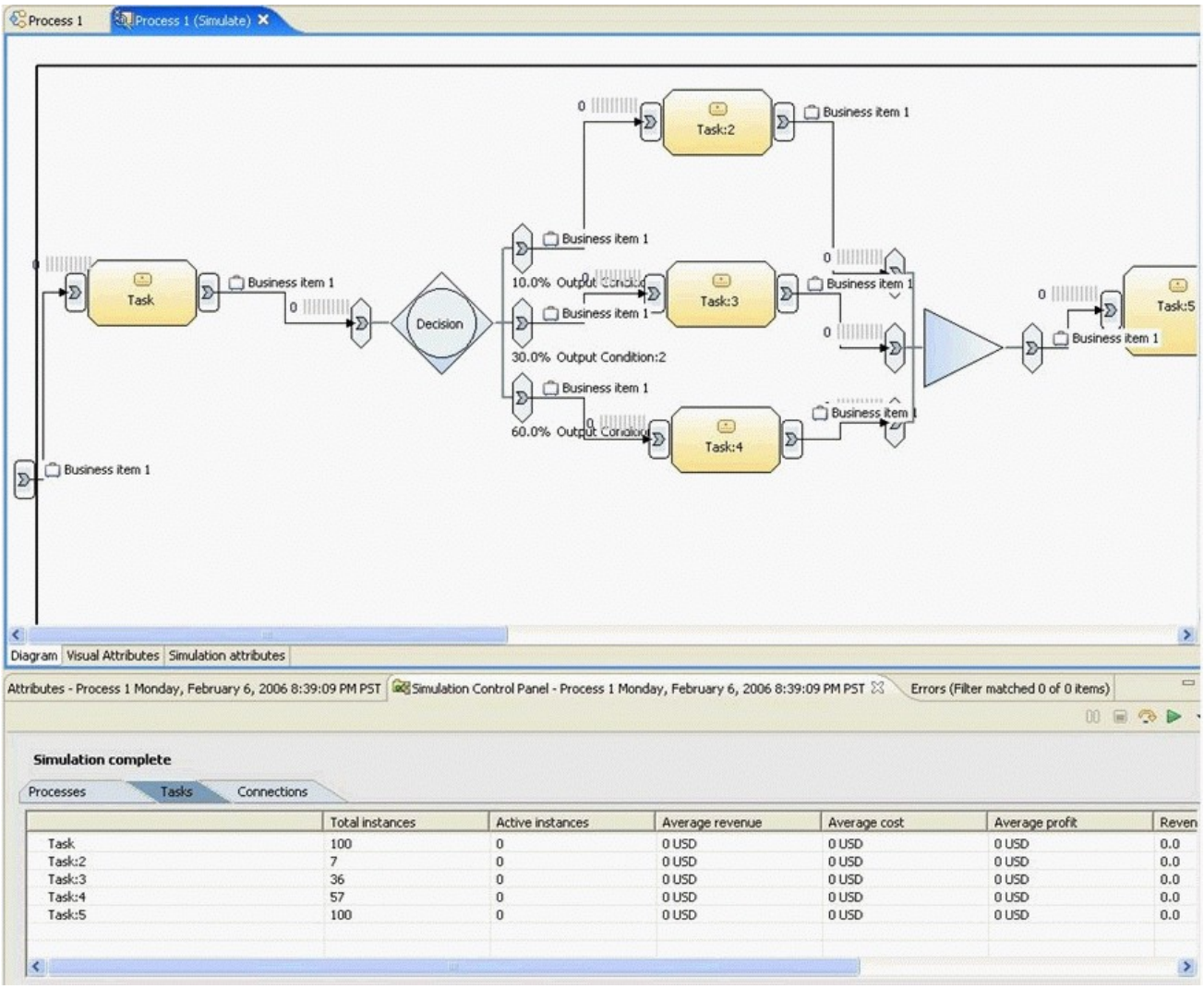

A.The simulation engine did not successfully complete processing of all 100 tokens.
B.The decision is being made inclusively.
C.The simulation engine is not distributing the tokens as the percentages on the branches of the decision indicate
D.Task 2,3,4 are not executing simultaneously.

Correct:D

5.Which of the following is the BEST approach for comparing the performance of different versions of the same process model?

A.Use the change management repository, and run a compare to determine the changes from the older to the newer.
B.Use the change management repository, and activate the comparison analysis.
C.Use the simulation results from the two versions of the same process model, and run the comparative analysis from static analysis.
D.Use the simulation results from the two versions, and activate the comparison analysis from dynamic analysis.

Correct:D

6.A fire department is trying to project costs for the coming year. They know that a business

analyst has built a business model for processing emergencies. There is a requirement for 3 Emergency Medical Technicians (EMTs) to be available 24 hours each day. The department wants to know what the cost of the EMTs will be. The business analyst can help the department by providing which of the following reports?

A.Dynamic Analysis - Process Cost Report

B.Dynamic Analysis - Process Resource Allocation Report

C.Static Analysis - Resource Cost Report

D.Static Analysis - Activity Cost and Duration

Correct:C

7.Click the Exhibit button. Each task in the process has the same processing time. Each task is accomplished with the same individual resource. In the Save Records task, the time required of the resource exceeds the processing time. In the Update Information task, the resources time required equals the processing time. Given the simulation results, which two of the following measures remain constant during the running of the process simulation?

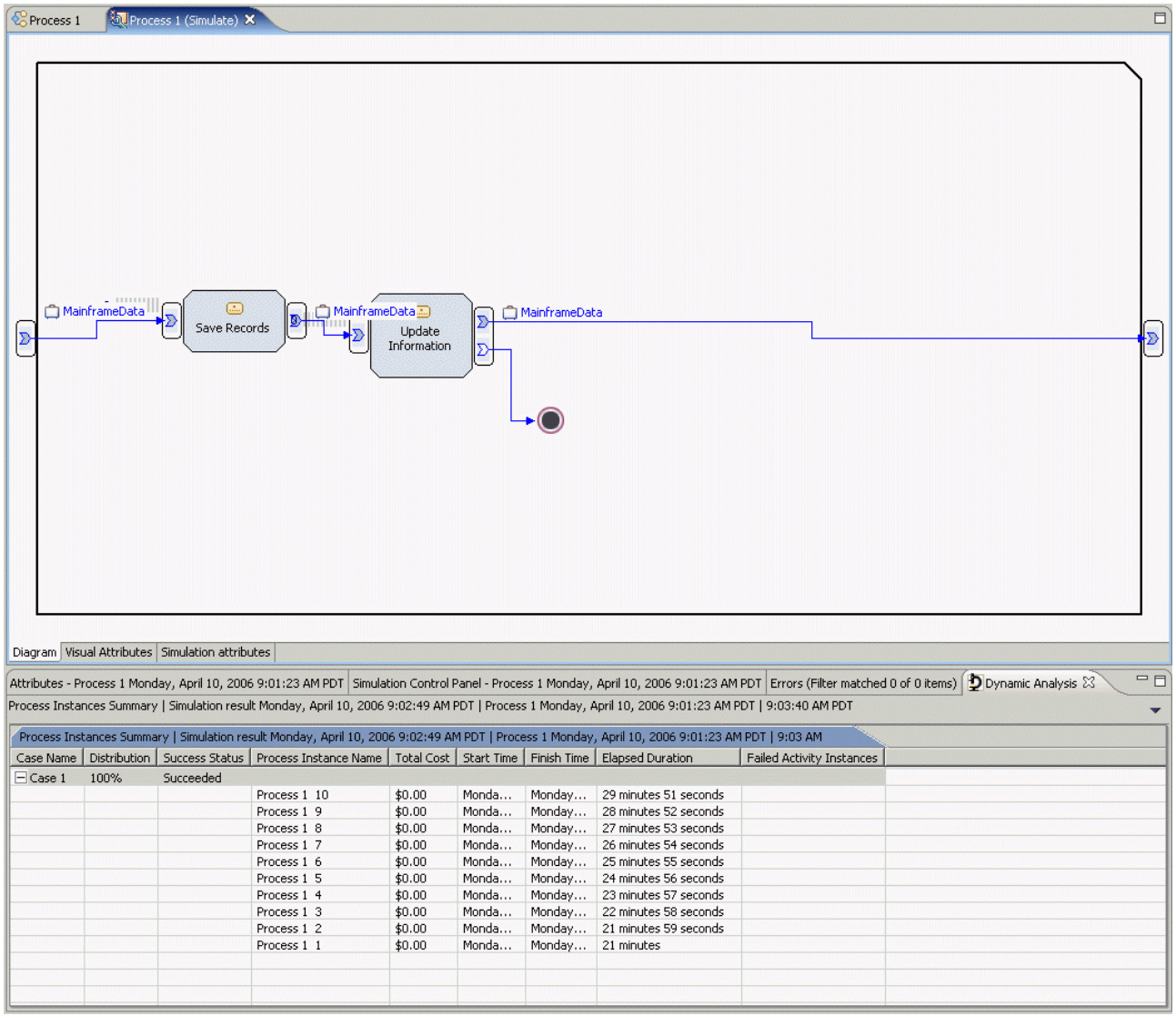

A.Shortage duration

B.Elapsed duration

C.Delay duration

D.Working duration

E.Allocation duration

Correct:D E

8.Click the Exhibit button. The manufacturing process for a widget is shown in the exhibit. The process consists of 3 steps: drill, bend and de-burr. There is a jig that is required for the drilling task. The output shown in the process instances summary confirms which of the following problems in the process?

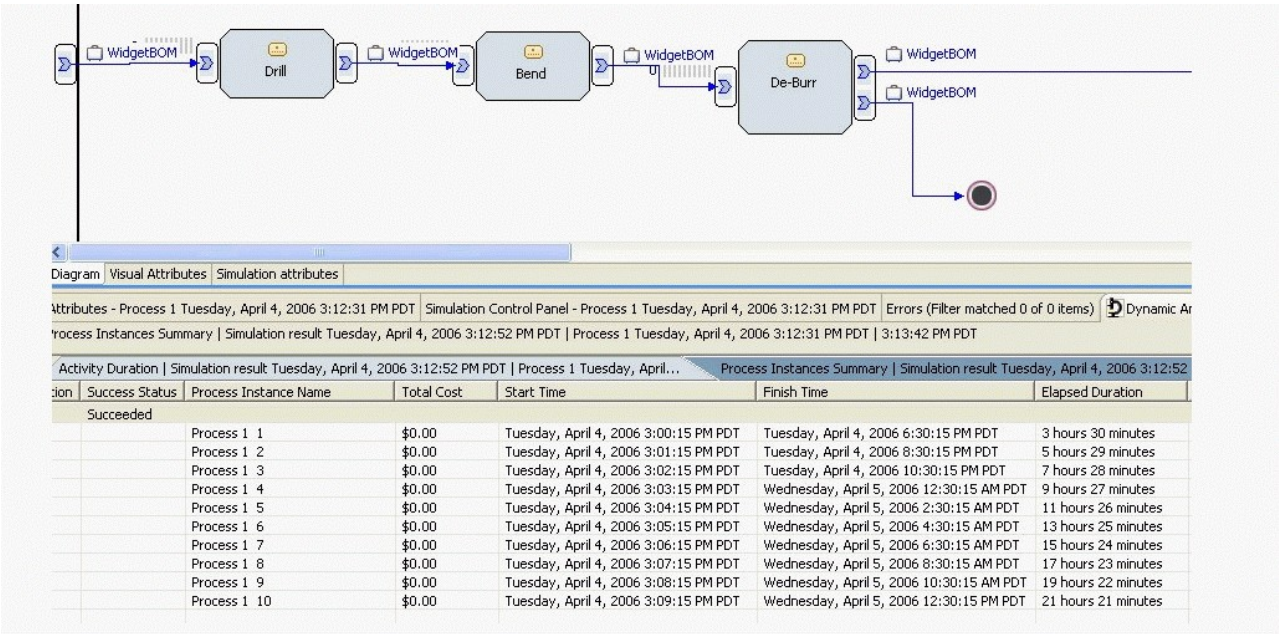

Success Status	Process Instance Name	Total Cost	Start Time	Finish Time	Elapsed Duration
Succeeded					
	Process 1 1	$0.00	Tuesday, April 4, 2006 3:00:15 PM PDT	Tuesday, April 4, 2006 6:30:15 PM PDT	3 hours 30 minutes
	Process 1 2	$0.00	Tuesday, April 4, 2006 3:01:15 PM PDT	Tuesday, April 4, 2006 8:30:15 PM PDT	5 hours 29 minutes
	Process 1 3	$0.00	Tuesday, April 4, 2006 3:02:15 PM PDT	Tuesday, April 4, 2006 10:30:15 PM PDT	7 hours 28 minutes
	Process 1 4	$0.00	Tuesday, April 4, 2006 3:03:15 PM PDT	Wednesday, April 5, 2006 12:30:15 AM PDT	9 hours 27 minutes
	Process 1 5	$0.00	Tuesday, April 4, 2006 3:04:15 PM PDT	Wednesday, April 5, 2006 2:30:15 AM PDT	11 hours 26 minutes
	Process 1 6	$0.00	Tuesday, April 4, 2006 3:05:15 PM PDT	Wednesday, April 5, 2006 4:30:15 AM PDT	13 hours 25 minutes
	Process 1 7	$0.00	Tuesday, April 4, 2006 3:06:15 PM PDT	Wednesday, April 5, 2006 6:30:15 AM PDT	15 hours 24 minutes
	Process 1 8	$0.00	Tuesday, April 4, 2006 3:07:15 PM PDT	Wednesday, April 5, 2006 8:30:15 AM PDT	17 hours 23 minutes
	Process 1 9	$0.00	Tuesday, April 4, 2006 3:08:15 PM PDT	Wednesday, April 5, 2006 10:30:15 AM PDT	19 hours 22 minutes
	Process 1 10	$0.00	Tuesday, April 4, 2006 3:09:15 PM PDT	Wednesday, April 5, 2006 12:30:15 PM PDT	21 hours 21 minutes

A.There are insufficient resources to keep up with manufacturing demand.

B.The tasks must not be sequential.

C.The order of the tasks is incorrect.

D.Bad data modeling practices are causing unexpected process simulation results.

E.The specified duration of each task is too long.

Correct:A

9.An analyst is reviewing a process model and wants to validate that every task has resources assigned to it. To accelerate the validation, the analyst chooses to use the Swimlane layout functionality. After viewing the appropriate Swimlane layouts, the analyst incorrectly assumes the model is incomplete because various tasks fall in the Unassigned lane. Given that every task has a resource assigned to it, which statement accurately disproves the analysts assumption?

A.The Swimlane functionality only supports lanes defined by individual resources.

B.The Swimlane functionality only supports lanes defined by bulk resources.

C.Resources must be assigned to a tasks role to show as a Swimlane.

D.Individual and bulk resources cannot be viewed simultaneously in the same Swimlane layout.

Correct:D

10.To properly model a business process, several models are required. These include Organization, Process, Data and Resource models. When approaching the resource model, the analyst must keep in mind that the resource model does which of the following?

A.Defines the resource types and instances associated to the model

B.Defines the view of resources used within a business process

C.Defines and identifies the structure of associated resources
D.Defines resource utilization levels, as well as cost and cycle time calculations
Correct:A

11.An analyst would like to calculate the average duration of a select set of non-contiguous tasks in a linear process. Which of the following is the quickest, most accurate method to get this information over several simulation runs?
A.Use the simulation results to get the average duration of each of the selected tasks and manually sum them.
B.Run the process activities total time report.
C.Set classifiers on selected tasks and run the process classifier cost and duration report.
D.Run the activity duration report and add selected task durations manually.
Correct:C

12.To validate a process model, an analyst sets up simulation for 100 tokens to be passed into a process. The task chart can be used to determine which of the following?
A.The distributions and the total instances that each task has been hit.
B.The total instances that each task has been hit and the average duration of each instance.
C.The distributions and the path of each token per instance activation.
D.The total instances and the instances a token was routed from one path to the next.
Correct:A

13.A business analyst redesigned a model, ran a simulation, and completed analysis for validation. Next, the analyst can use the Process Comparison to:
A.Determine the degrees of improvement for various alternative solutions based on various analyses.
B.Use a spreadsheet to perform additional analyses on key features and attributes of the process model.
C.Determine changes in resource allocation and availability.
D.Determine the versions of the process being compared.
Correct:A

14.Activity throughput analysis provides the capability to analyze the production capability of an activity, which is the amount of work each activity can perform for a given period of time. The throughput analysis provides each of the following, EXCEPT:
A.the maximum attainable throughput for the activity if all available quantities of this bulk resource or role in the project are assigned to this activity.
B.any notes generated by the analysis relating to the requirement.
C.the maximum sustainable throughput for the activity based on the highest value calculated for Throughput or Maximum Throughput Due to Resource or Role.
D.the maximum throughput for the activity based on the highest value calculated for Throughput or Maximum Throughput Due to Resource or Role.
Correct:C

15.Click the Exhibit button. While running in simulation mode, an analyst sees that the tokens(10) are progressing through the process in a manner shown in the exhibit. What can the analyst derive?

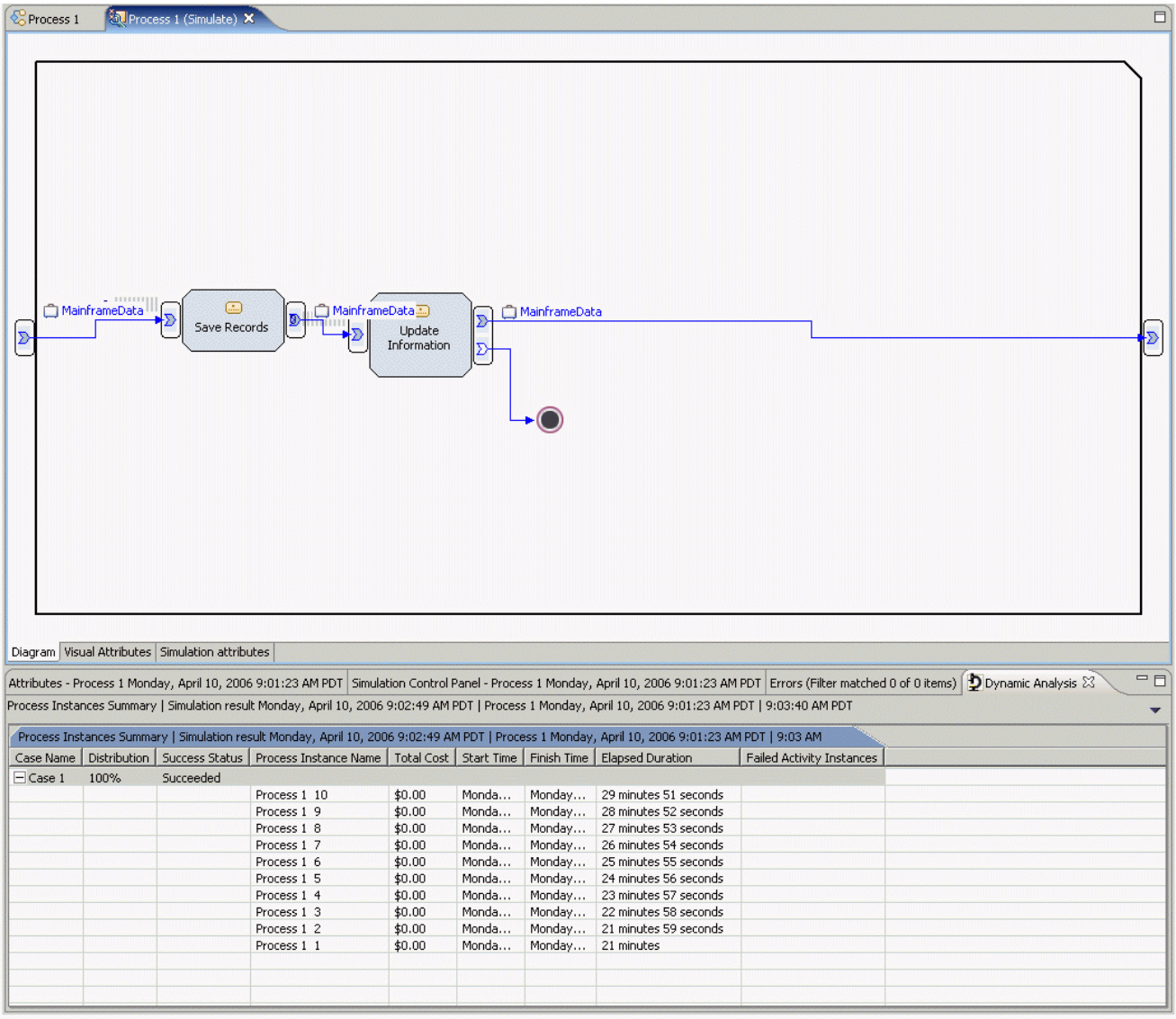

A.The resource(s) assigned to the Drill task is/are overloaded.
B.The output terminal on the Drill task is throttling work from proceeding to Bend.
C.The Bend task is in need of additional resources.
D.The Process needs an additional task to even out the workload distribution.

Correct:A

16.What should an analyst do to most efficiently determine the availability of a specific resource?

A.Run a simulation and review the static analysis.
B.Select the resource catalog(s) and then the desired resource.
C.Select the desired resource, determine the timetable assigned, and then review the timetable.
D.Run simulation and review the resource availability on the Tasks Tab of the Simulation Control Panel.

Correct:B

17.When a process is changed and a simulation is performed on a process, an analysis of the impact of the model changes is best shown by generating reports from which of the following Dynamic Analyses?

A.Aggregated analysis

B.Process Cases Analysis
C.Process Instances Analysis
D.Processes Comparison Analysis
Correct:D

18.A process contains a global process. The global process contains several tasks and its own set of business measures. A business analyst wants to create business measures based upon state changes of tasks within the global process. In addition, the analyst wants to use any business measure already created in the global process. Which of the following describe what the analyst's options?

A.The business analyst can access all of the tasks in the global process for the creation of business measures in the parent process, and the analyst can access all business measures in the global process by making them available.
B.The business analyst can access all of the tasks in the global process for the creation of business measures in the parent process, and the analyst cannot use any of the business measures in the global process.
C.The business analyst cannot use any of the tasks in the global process for the creation of business measures in the parent process, and the analyst cannot use any of the business measures in the global process.
D.The business analyst cannot use any of the tasks in the global process for the creation of business measures in the parent process, and the analyst can access all business measures in the global process by making them available.
Correct:D

19.A process needs to have cost available by state and city. The information should be available as historical data allowing the user to drill down to the appropriate level of detail. What needs to be done to accomplish this task?

A.Define the cost as quantitative data and the state and city as aggregation groups.
B.The state and city must first be combined into a single string type business measure.
C.Define the cost, state and city as active data about running process.
D.Only the lowest level aggregate needs to be defined as a database key, since it is included in the higher levels.
Correct:A

20.Which of the following is a design principle when developing business measures?

A.They should be developed to cover every measurable event.
B.They should be open to multiple interpretations.
C.The should require a small sampling size.
D.There should be a targeted distribution of measures.
Correct:D