KillTest

Higher Quality, Better Service!

Q&A

http://www.killtest.com

We offer free update service for one year.

Exam : **JN0-1301**

Title : Juniper Networks Certified Design Specialist, Data Center (JNCDS-DC)

Version : DEMO

1.You plan to deploy a set of SRX Series devices in an active/passive chassis cluster with an active/active network infrastructure.
Which two statements are true in this scenario? (Choose two.)
A. This deployment scenario is recommended when firewall services are used extensively for north-south traffic.
B. This deployment scenario is recommended when firewall services are used extensively for east-west traffic.
C. End-host traffic is serviced through one SRX node during non-failure conditions.
D. End-host traffic is serviced through both SRX nodes during non-failure conditions.
Answer: AC

2.Click the Exhibit button.

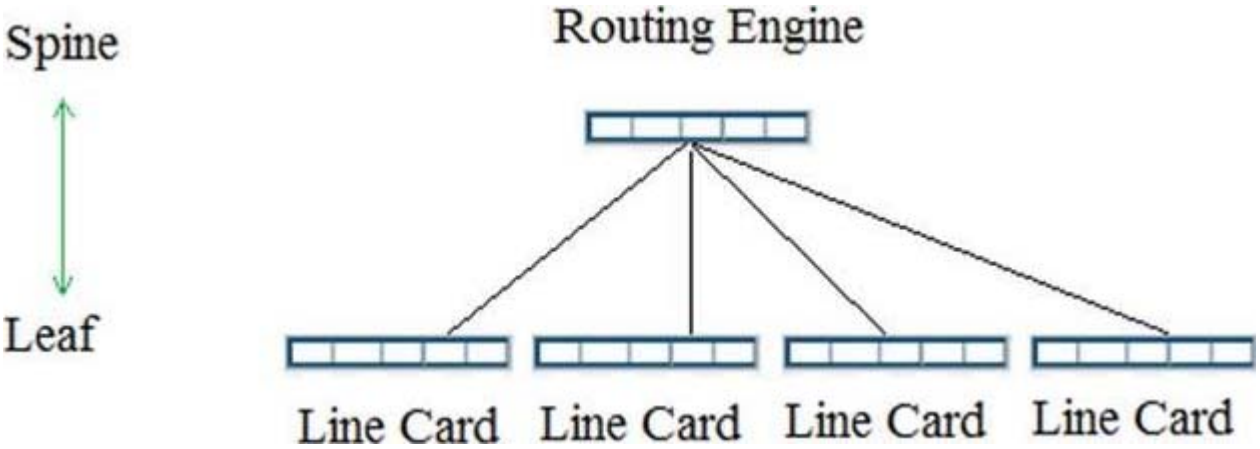

Referring to the exhibit, what must you change to make the topology a supported Virtual Chassis Fabric design?
A. Change the Routing Engine to a line card.
B. Remove one leaf node.
C. Add a second spine node.
D. Change one of the line cards to a VCP master instance.
Answer: C

3.You are designing an IP fabric using EVPN with VXLAN and must ensure that all links between the leaf and spine nodes are used as efficiently as possible.
Which two design considerations are important to achieve this task? (Choose two.)
A. Load balancing is automatic in an IP fabric design.
B. Load balancing must be managed by an SDN controller in an IP fabric design.
C. The overlay network needs to support load balancing.
D. The underlay network needs to support load balancing.
Answer: AD

4.You are designing a Control-based SDN overlay network. IP filtering and tenant separation for Layer 3 and Layer 4 traffic is required for this installation.
In this scenario, which Contrail component performs this function?
A. vSwitch

B. control node
C. vRouter
D. compute node
Answer: C

5.You are implementing traffic prioritization in your IP fabric. You must ensure that traffic is handled correctly throughput the fabric.
In this scenario, which statement is correct?
A. You should implement a BA classifier on all egress interfaces on the leaf devices.
B. Rewrite rules must be applied on the spine devices for all leaf-facing interfaces.
C. You should implement a BA classifier on all egress interfaces on the spine devices.
D. Schedulers should be applied to all egress interfaces on your leaf and spine devices.
Answer: D