KillTest

Higher Quality, Better Service!

Q&A

http://www.killtest.com

We offer free update service for one year.

Exam : **920-552**

Title : GSM BSS Operations and Maintenance

Version : DEMO

1. Refer to the exhibit that appears below.

What is the meaning of the icon in the exhibit?

A. An antistatic bracelet (ESDS) must be worn.

B. Gloves are recommended (high temperature).

C. A power supply should never be replaced when it is energized (electric shock).

D. Personnel must be authorized to work, according to the local safety standards.

Answer: A

2. In which NTP volume can you find the information about the replacement of a specific module in a GSM Base Transceiver Station (BTS) 18020?

A. 411-9001-161 BTS 18000 Fault Clearing

B. 411-9001-160 BTS 18000 Fundamentals

C. 411-9001-162 BTS 18000 Troubleshooting

D. 411-9001-051 TML (BTS) Commissioning and Fault management

Answer: C

3. Which function is NOT a function of the Base Transceiver Station (BTS) site manager?

A. GSM Time management

B. TX and RX management

C. Abis interface management

D. LAPD signaling concentration / deconcentration

Answer: B

4. What is the maximum power generated by a RM 1900?

A. GSM 30 W - EDGE 30 W

B. GSM 40 W - EDGE 30 W

C. GSM 40 W - EDGE 40 W

D. GSM 60 W - EDGE 45 W

Answer: A

5. What is the maximum number of TRXs in a three-cabinet GSM Base Transceiver Station (BTS) 18020 using MPRM modules?

A. 6

B. 9

C. 18

D. 54

Answer: D

6. What is the maximum configuration of the GSM Base Transceiver Station (BTS) 18000 using HPRM modules in V16.0?

A. 3S6.6.6

B. 3S16.16.16

C. 3S18.18.18

D. 3S12.12.12

Answer: D

7. What is the meaning of the S111 working mode in a RM module?

A. three TRXs of the RM belong to the same sector

B. three TRXs of the RM belong to three different sectors

C. three TRXs of the RM belong to the same frequency band

D. three TRXs of the RM belong to three different frequency bands

Answer: B

8. How many reception paths are needed in a Radio Module (RM) configured in O3 mode?

A. it depends on the cabling of the DDM

B. it depends on the configuration of the sector

C. one main and one diversity path for all TRXs

D. one main and one diversity path for each TRXs

Answer: C

9. Refer to the exhibit that appears below.

In which configuration of a GSM Base Transceiver Station (BTS) 18000 can two ICM boards reside in a single shelf?

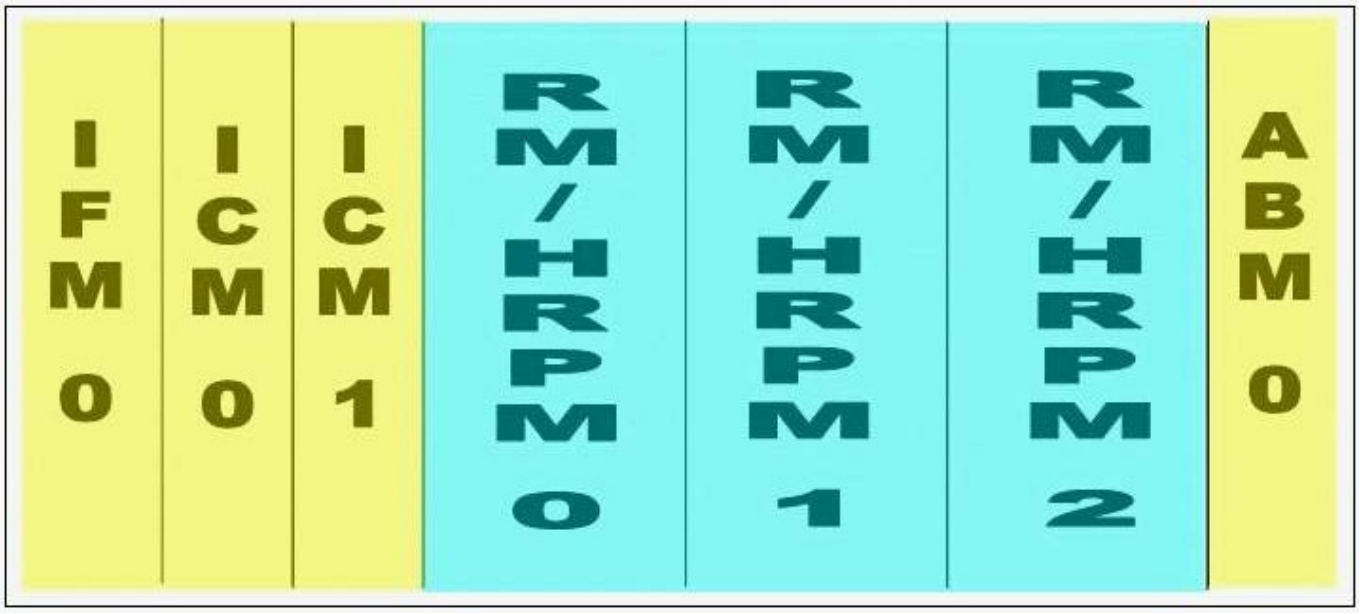

A. a GSM BTS 18000 with IBP panel

B. a GSM BTS 18000 with DBP panel

C. a GSM BTS 18000 with CIBP panel

D. a GSM BTS 18000 with CDBP panel

Answer: C

10. Refer to the exhibit that appears below.

What are the cabling problems in the GSM Base Transceiver Station (BTS) 18000?

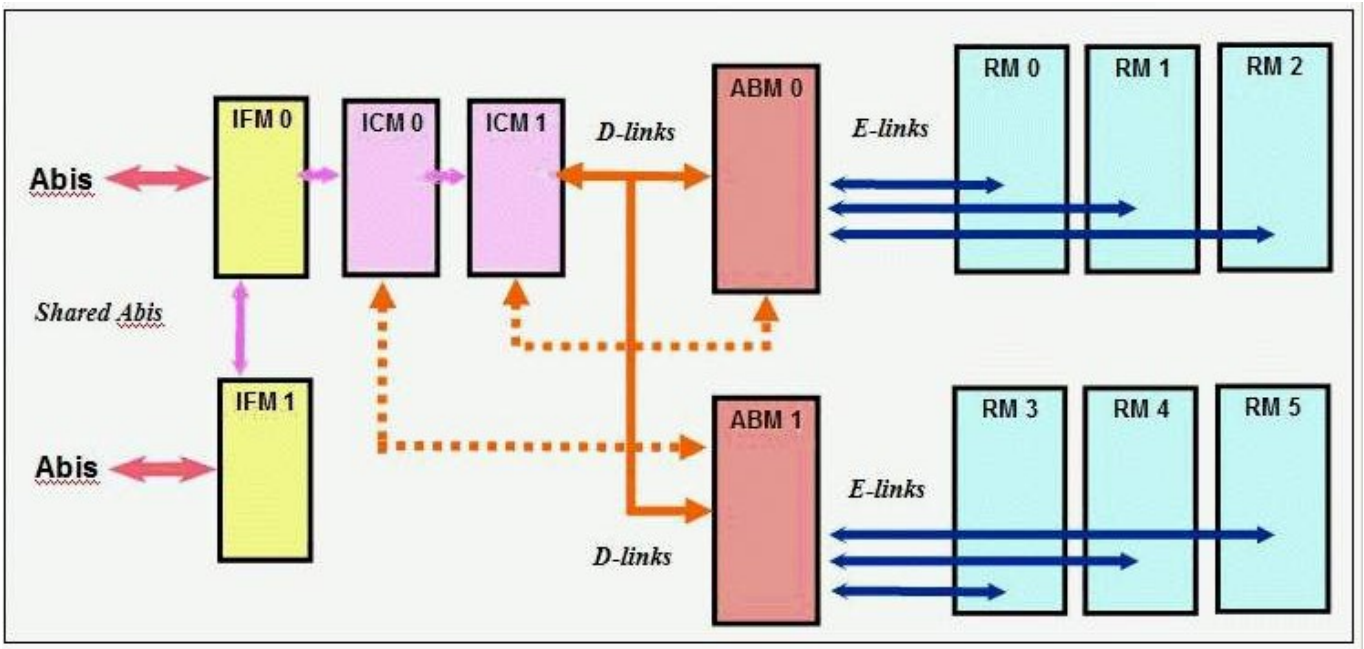

A. The IFM1 should be directly connected to ICM0.

B. The Abis should be directly connected to the ICM.

C. The E-link should be between the ICM and the ABM.

D. The ICM0 and ICM1 should be connected to ABM0 and ABM1 respectively.

Answer: D

11. Refer to the exhibit that appears below.

According to the table in the exhibit, how many rectifiers of 1400W are necessary (with redundancy) for a GSM Base Transceiver Station (BTS) 18000 populated with Radio Module (RM) 1900 in which the configuration is S444?

# TRX	# RM in GSM 1800/1900	Typical Conso DC (W)	Spec. Conso DC (W)	# Rect 1kW	# Rect 1.4 kW	# Rect 1kW	# Rect 1.4 kW
				w/o redundancy		w/ redundancy	
3	1	1400	1672	2	2	2+1	2+1
6	2	1926	2331	3	2	3+1	2+1
9	3	2451	2989	3	3	3+1	3+1
12	4	2976	3648	4	3	4+1	3+1
15	5	3501	4307	5	4	N/A	4+1
18	6	4027	4966	5	4	N/A	4+1

A. 2

B. 3

C. 4

D. 5

Answer: C

12. How many link and alarms can the lightning protection PRIPRO2 support ?

A. 4 Abis links and 8 external alarms

B. 4 Abis links and 16 external alarms

C. 8 Abis links and 8 external alarms

D. 8 Abis links and 16 external alarms

Answer: A

13. Refer to the exhibit that appears below.

Which modules of the GSM BTS 18000 match the numbers in the exhibit?

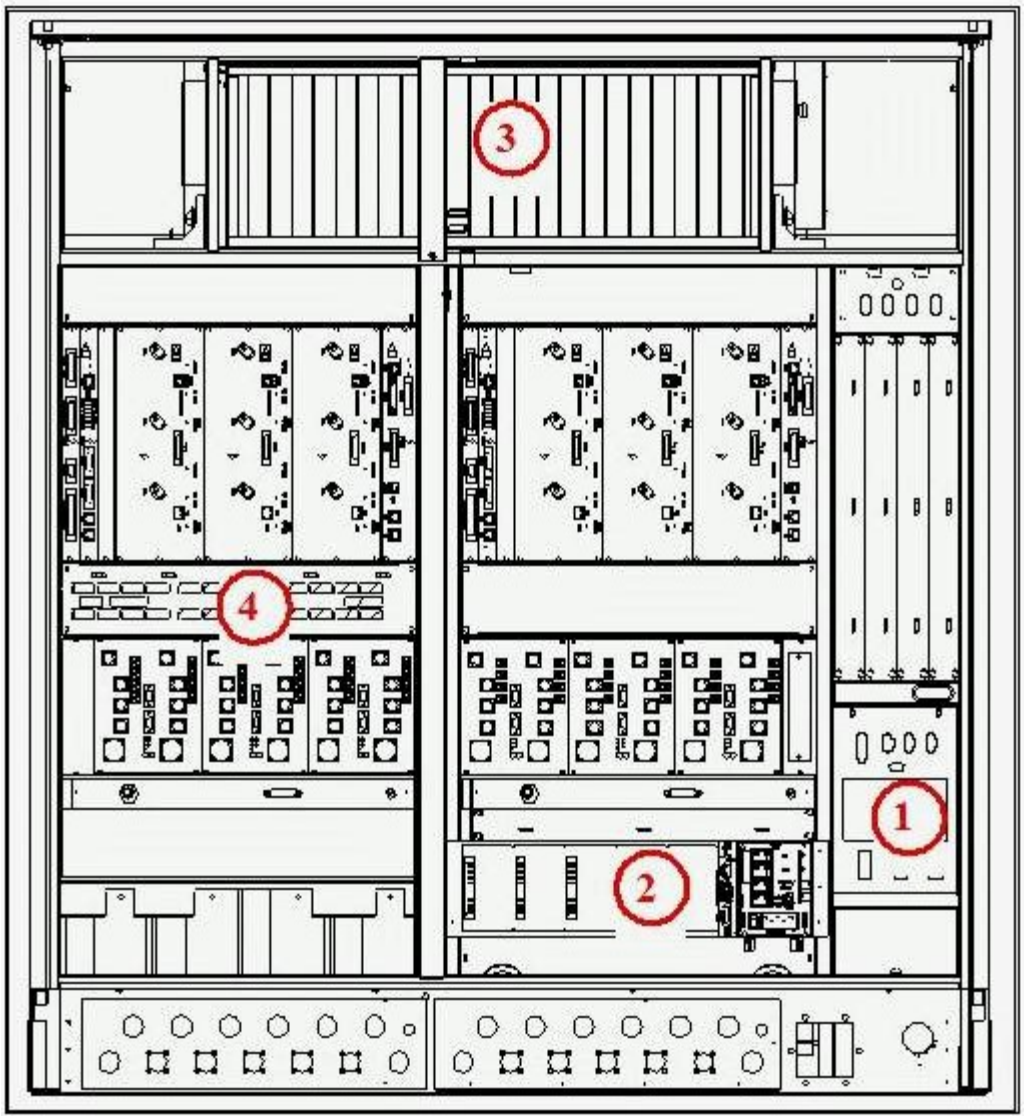

A. 1: ECU 2: UCPS 3: RICO 4: ADU

B. 1: UCPS 2: RICO 3: ECU 4: ADU

C. 1: ADU 2: UCPS 3: ECU 4: RICO

D. 1: RICO 2: UCPS 3: UCPS 4: ADU

Answer: C

14. Refer to the exhibit that appears below.

When powering on the BTS 18020, in which order should the modules in the DDU be switched on?

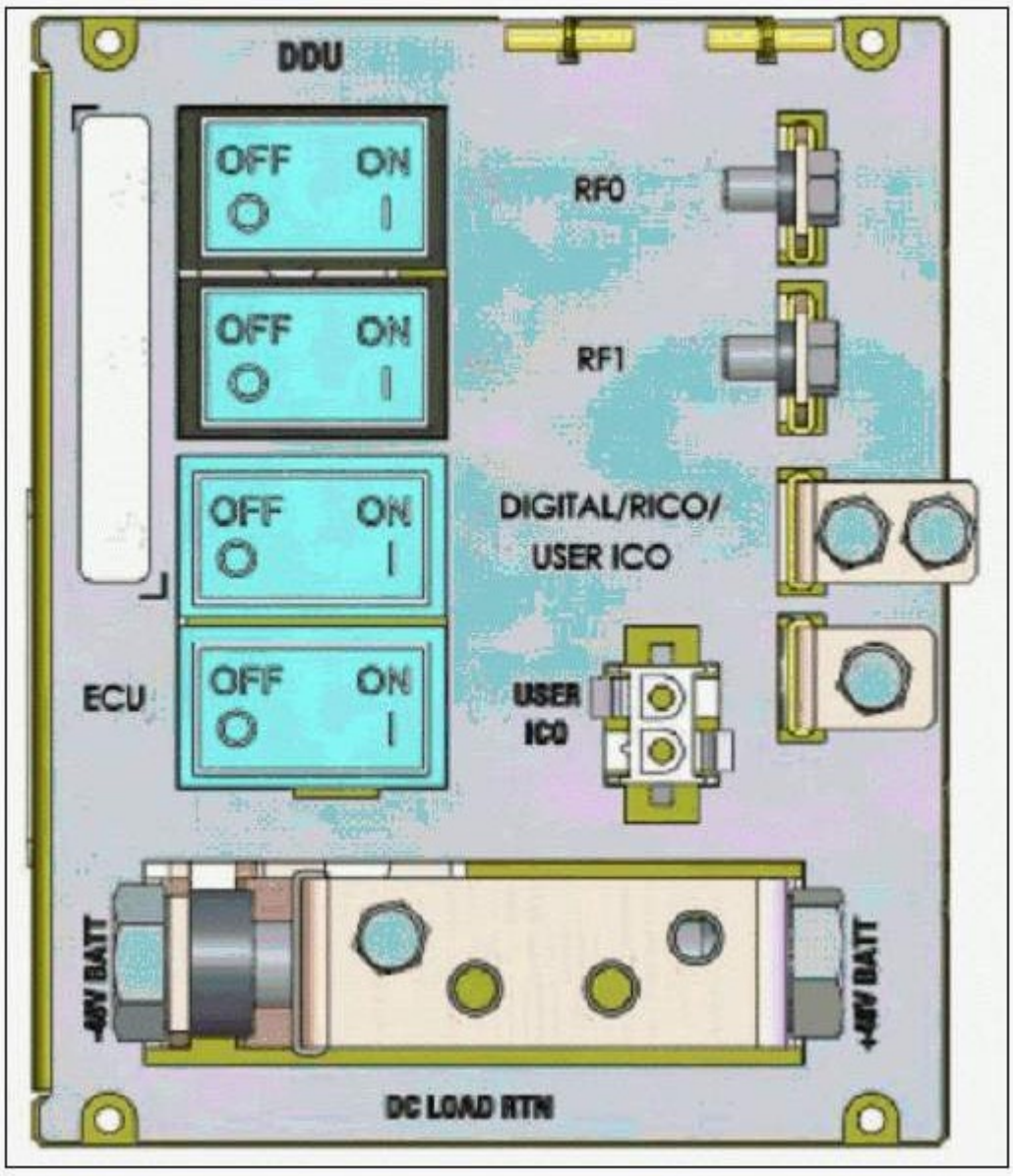

A. all simultaneously

B. Digital/RICO, RF0, ECU, RF1

C. RF0, RF1, ECU Digital/RICO

D. ECU, Digital/RICO, RF0, RF1

Answer: D

15. When configuring a GSM Base Transceiver Station (BTS) 18000, what is the maximum number of TRXs that can be defined on a LAPD timeslot?

A. 6

B. 8

C. 9

D. 10

Answer: C

16. Refer to the exhibit that appears below.

The TEI of the Base Transceiver Station (BTS) is configured via the switch 10 (SW10) in the ICM board.

According to the exhibit, what is the TEI value?

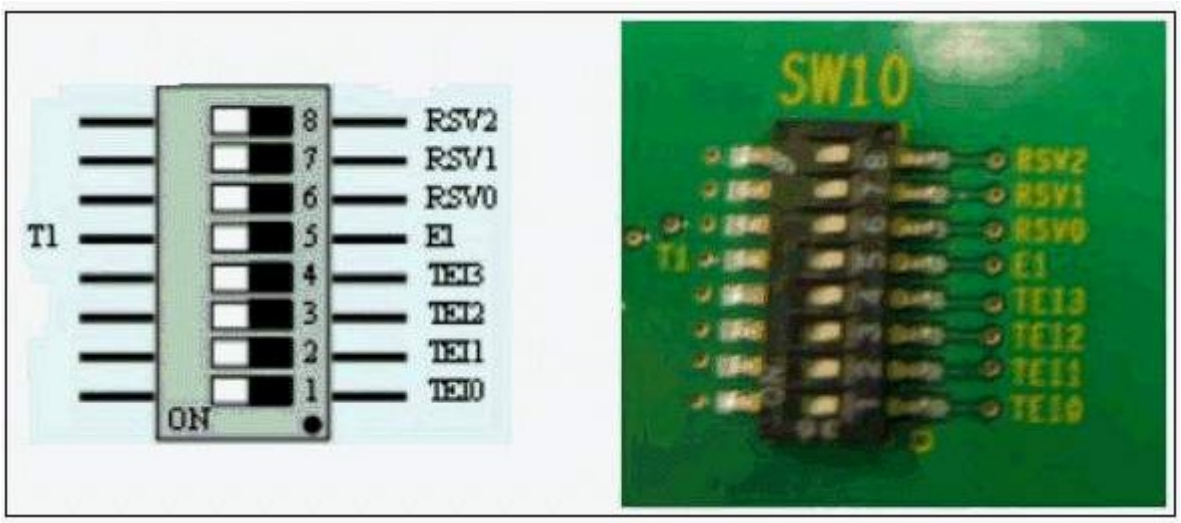

A. 0

B. 1

C. 2

D. 3

Answer: A

17. What is the main difference between a Base Transceiver Station (BTS) in stand-alone mode and a BTS in connected mode?

A. In stand-alone mode, the ICM board is not operational, whereas in connected mode it is operational

B. In the connected mode, the ICM board is operational, whereas in the stand-alone mode it is not operational.

C. In stand-alone mode, the BTS is not linked to the network, whereas in connected mode it is linked to the network.

D. In connected mode, the BTS is not linked to the network, whereas in stand-alone mode it is linked to

the network.

Answer: C

18. Refer to the exhibit that appears below.

What are the TEI values of the TRX that are in stand-alone mode?

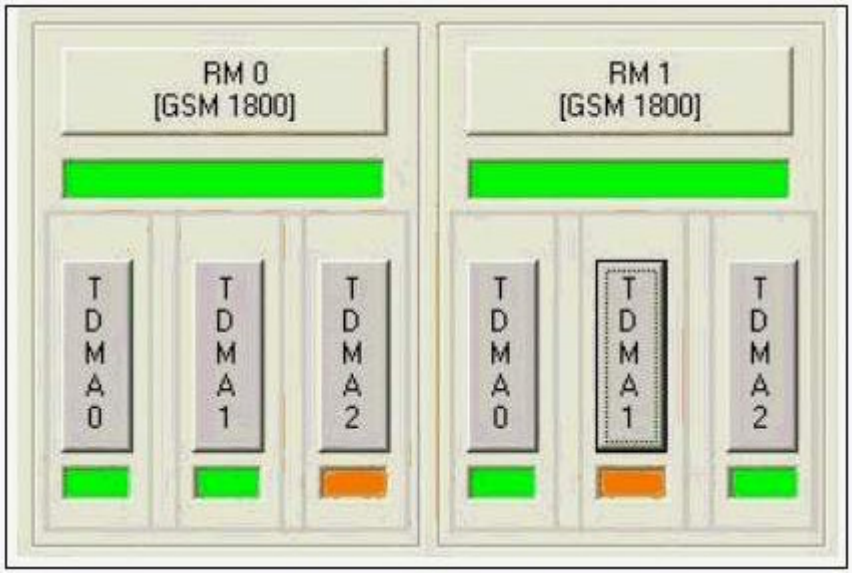

A. 32 - 35

B. 32 - 36

C. 33 - 36

D. 34 - 37

Answer: D

19. Refer to the exhibit that appears below.

Which module is impacted when the TIL shows the alarm below? AC_MAIN_BREAKER_CAB0

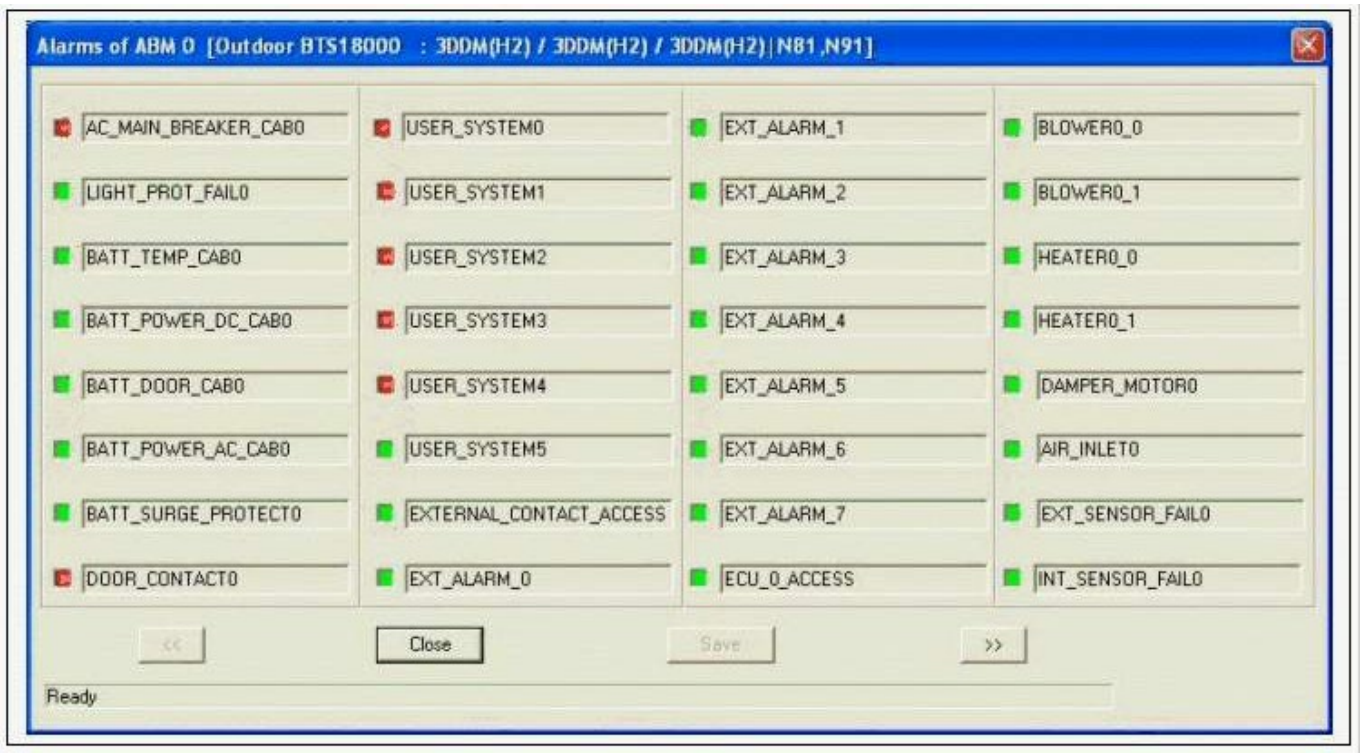

A. ADU

B. ECU

C. RICO

D. UCPS

Answer: A

20. Refer to the exhibit that appears below.

Which module is impacted when the TIL shows the alarm in the exhibit?

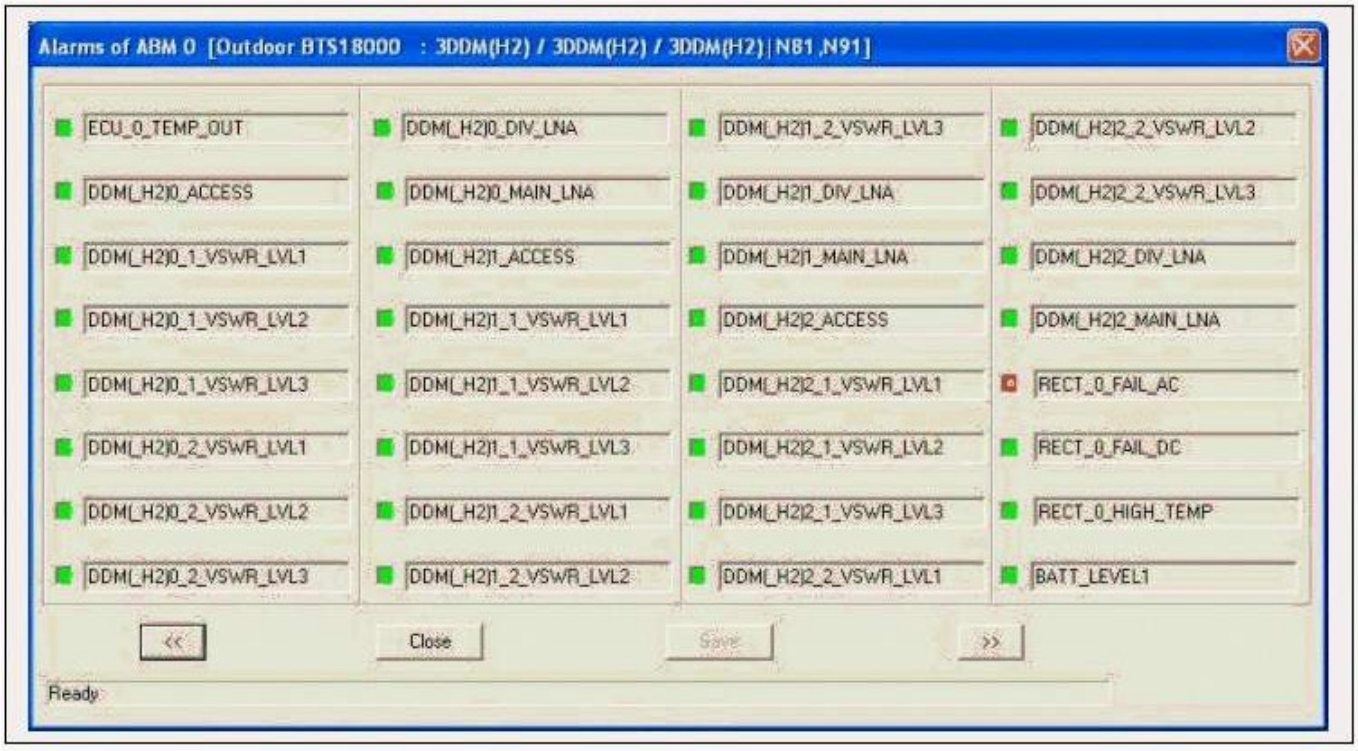

A. ADU

B. ECU

C. RICO

D. UCPS

Answer: D